Low Cost Commercial PV & PV-battery inverters

Asia Pacific Clean Energy Summit 2011
Defense Energy Technology Spotlight
September 14, 2011

Paul Bundschuh
VP of Business Development
Paul.Bundschuh@IdealPowerConverters.com

IDEAL POWER CONVERTERS

www.IdealPowerConverters.com

Military Base Powergrids

- **2020 goals from Secretary of the Navy Ray Mabus**
  - 50% of shore-based energy from alternative sources, and
  - 50% of DoN installations will be net-zero energy
  - Other services also pursuing aggressive renewable energy goals

- **What energy technologies are needed?**
  - Low cost, renewable, and distributed
    - Photovoltaics are cost-effective in Hawaii, and getting cheaper
    - Wind, tidal/wave, and waste are also promising
  - Hybrid systems mixing PV, batteries and other resources
  - Microgrid capabilities to run independently of commercial grid

- **How can this be accomplished?**
  - Hawaiian DOD bases will be the early adopters
  - IPC's revolutionary products lower costs, simplify installation, and accelerate deployment

IDEAL POWER CONVERTERS

Business Overview

- **Developed new electronic power converter technology**
  - 2 US patents issued, additional US and international patents pending
  - Applications: photovoltaic, wind, battery, VFD and PHEV

- **Licensed to Lockheed Martin for military & vehicle mkts**
  - Co-developing new microgrid converter for Forward Operating Bases

  "LM's Intelligent Microgrid will reduce diesel requirements of FOB by up to 40%"

LOCKHEED MARTIN

- **Initial product is 30kW grid-tied PV inverter**
  - Lowers cost & simplifies installation for US large rooftop installations
  - Completing certification and beginning commercial shipment

- **New combined PV & battery inverter**
  - Lowers cost & improves efficiency of hybrid PV and battery systems
  - Available in 2012

Commercial-scale PV $/W$_{dc}$

4Q 2010 DOE SETP Survey

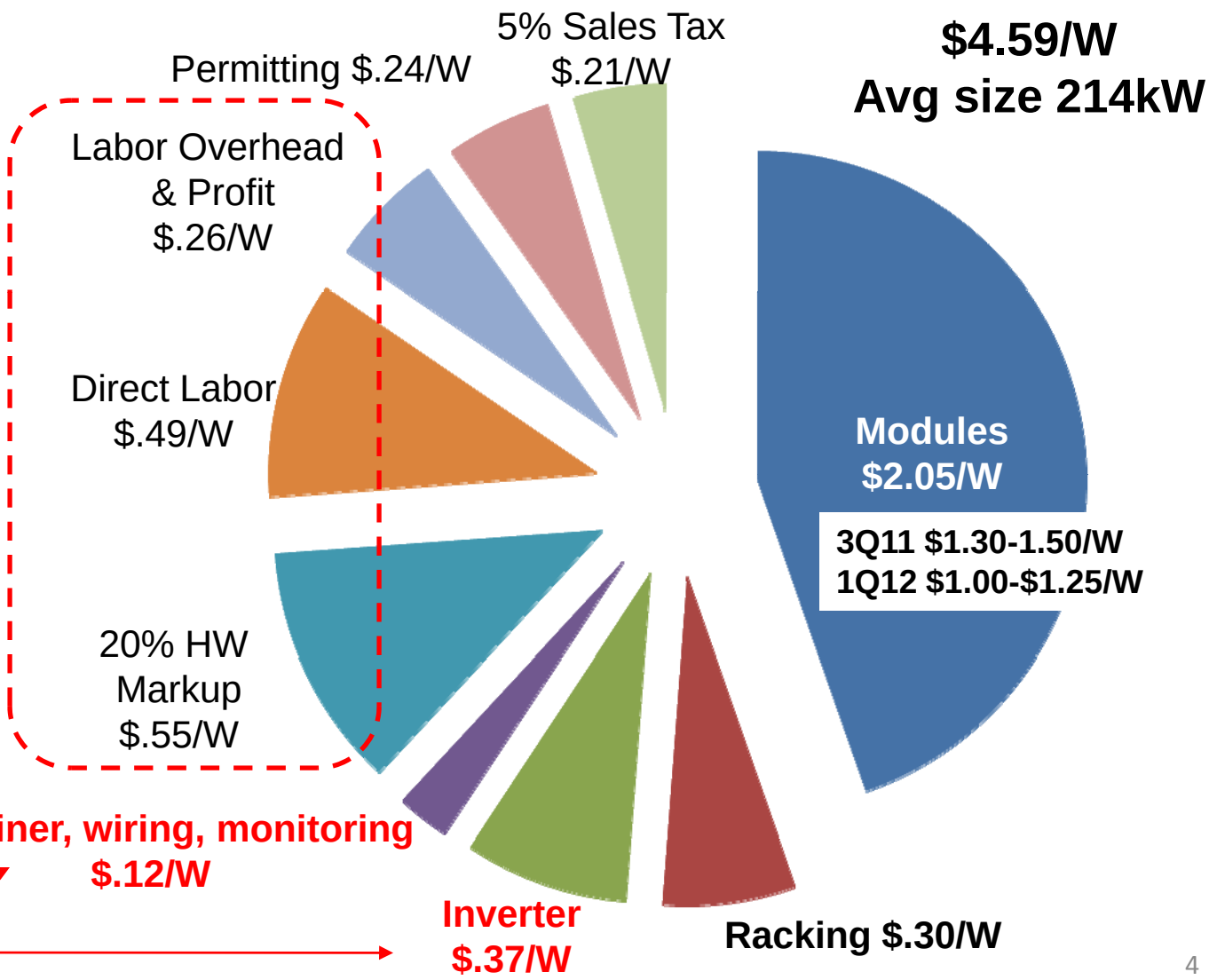

Indirect & Installation Costs $1.30

- **Simplify Installation**
- **Standardize & modularize system designs**

IPC opportunities for cost reduction & system improvement

PV Inverter Comparison

480VAC 3-phase models

- **Lower Price -** 90% weight reduction lowers manufacturing costs
- **Lower Installation Costs** - 90% lower shipping & installation costs
- **Improved Yield -** Higher efficiency
- **Lower O&M Costs** - Improved reliability, simplified replacement

	IDEAL POWER CONVERTERS	Satcon	PV Powered
Power (kW)	30	30	35
Weight (lbs)	94	1204	1200
CEC Efficiency	97%	95%	96%

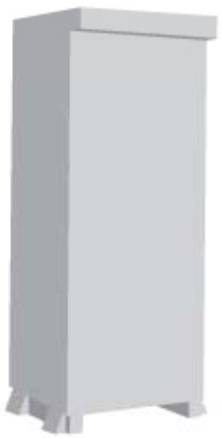

Lower Shipping & Installation Costs

- **90% lower indirect costs of shipping & installation**
  - Savings of \$0.10-.20/W_{dc} on initial installations
  - Even greater cost saving potential in Hawaii

	IPC 30kW	Conventional 30kW
Shipping	UPS Ground \$50	commercial freight \$500–1,000
Mounting	wall-mount 2 installers for 1 hour \$250	poured concrete pad forklift/crane rental \$1,500–5,000
Indirect Costs	\$300 \$0.01/Wp	\$2,000–6,000 \$0.07–0.20/Wp

Simplified installation enables system optimization

- **Conventional inverters located at building footprint**
  - Due to weight/size located outside the building on the ground
  - Limited choice due to exterior space restrictions
  - Long DC & AC runs add to wiring costs & losses

- **Low weight/size inverter enables more flexible installation**
  - Interior, penthouse utility rooms, under solar shades on roof

- **Optimizing inverter location for system cost & efficiency**
  - Reduces wiring costs and losses
  - Shorter DC runs from array to inverter
  - Shorter AC runs to building panel board or grid interconnection

- **Uses standard grounded (non-floating) arrays**

Penthouse Installation

4x 30kW$_{ac}$ inverters / 140-150kW$_{dc}$ array

Inverter Reliability & Reduced O&M Costs

- **Inverter failures cause extended downtime**
  - >50% of O&M is for inverter maintenance and repair
  - extended array downtime due to shipping and replacement process

- **IPC reduces the leading causes of Inverter Failure**
  - Capacitor Failure – all electrolytic capacitors eliminated
  - Switch Failure – extremely soft switching
  - Overvoltage Failure – more robust to transients such as lightning

- **O&M further improved**
  - No air filters to be regularly replaced.
  - Failure of smaller inverters doesn't shut down entire system
  - Simple replacement process
    - 30-minute field replacement procedure
    - Can stock replacements similar to modules

Combined PV & battery inverter comparison

PV to battery conversion efficiency

95% PV inverter
x 90% battery inverter
85.5% efficiency

Single conversion
97% efficiency

Conventional PV & Battery System

- 2 separate inverters
- Grid-Tied, requires active grid
- Requires balanced loads

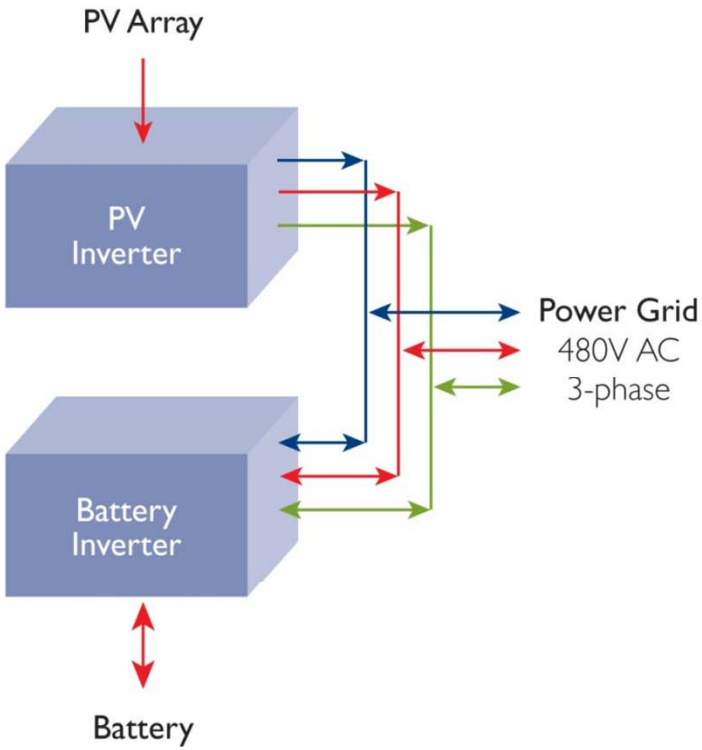

IPC PV & Battery System

- 1 inverter—lower cost & more efficient
- Operates during grid & communications faults
- Microgrid and unbalanced loads

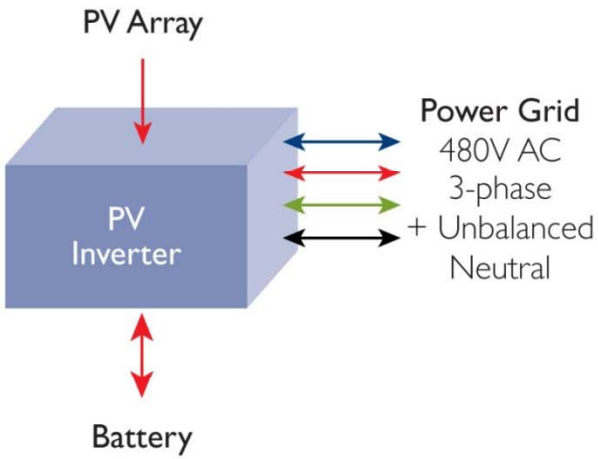

IDEAL POWER CONVERTERS

Summary

- **Initial product is 30kW grid-tied PV inverter**
  - Lowers cost & simplifies installation for Hawaiian base installations
  - Completing certification and begin shipments in 4Q 2011
  - Seeking Hawaiian PV installation firms and DOD installations

- **New combined PV & battery inverter**
  - Critical technology/product for net-zero energy bases
  - Enhance product to include an independent 3rd port for battery.
  - Includes support for Energy Surety Microgrids
  - Seeking pilot sites for testing on Hawaiian DOD facilities

- **Same core technology licensed by Lockheed Martin**
  - IPC co-developing new microgrid power converter for FOBs
  - Lockheed Martin won CERDEC development contract over 17 firms
  - May become the microgrid standard for DOD tactical installations
  - Purchasing IPC inverters will accelerate LM platform development